Parts

Fresnelite

Effective Mar 31, 2003

Certain parts may only be available as an assembly and therefore several diagram identification numbers will be included in a single part number. Parts not listed may be available in limited quantities.

FRESNELITE

Diag. Ident. No.	Strand Part #	Description
1,2,3,4,5	12081/3	Yoke Assembly Complete, 6" Fresnel
1,2,3,4,5	12181/11	Yoke Assembly Complete, 8" Fresnel
10	12181/9	200 MM Lens, 8" Fresnel
10	261/1	150 MM Lens, 6" Fresnel
12	12081/16	Lens Clips (pkg. of 3)
26	710/B038	Rear Handle
29, 30	12081/2	Door latch
35	CB/6-187004-010	Focus Handle (two required)
37	DB/6-280035-010	Reflector, 6" Fresnel
37	DB/6-280036-010	Reflector, 8" Fresnel
42	1-349034-000	Med. pre-focus lamp Socket 6" Theatre
42	261/15	Med. bi-post lamp Socket 6" Studio
42	1-349035-000	Mogul pre-focus lamp Socket 8" Theatre
42	283/44	Mogul bi-post lamp Socket 8" Studio
	FR/6-142030-010	Gel/Barndoor Clip

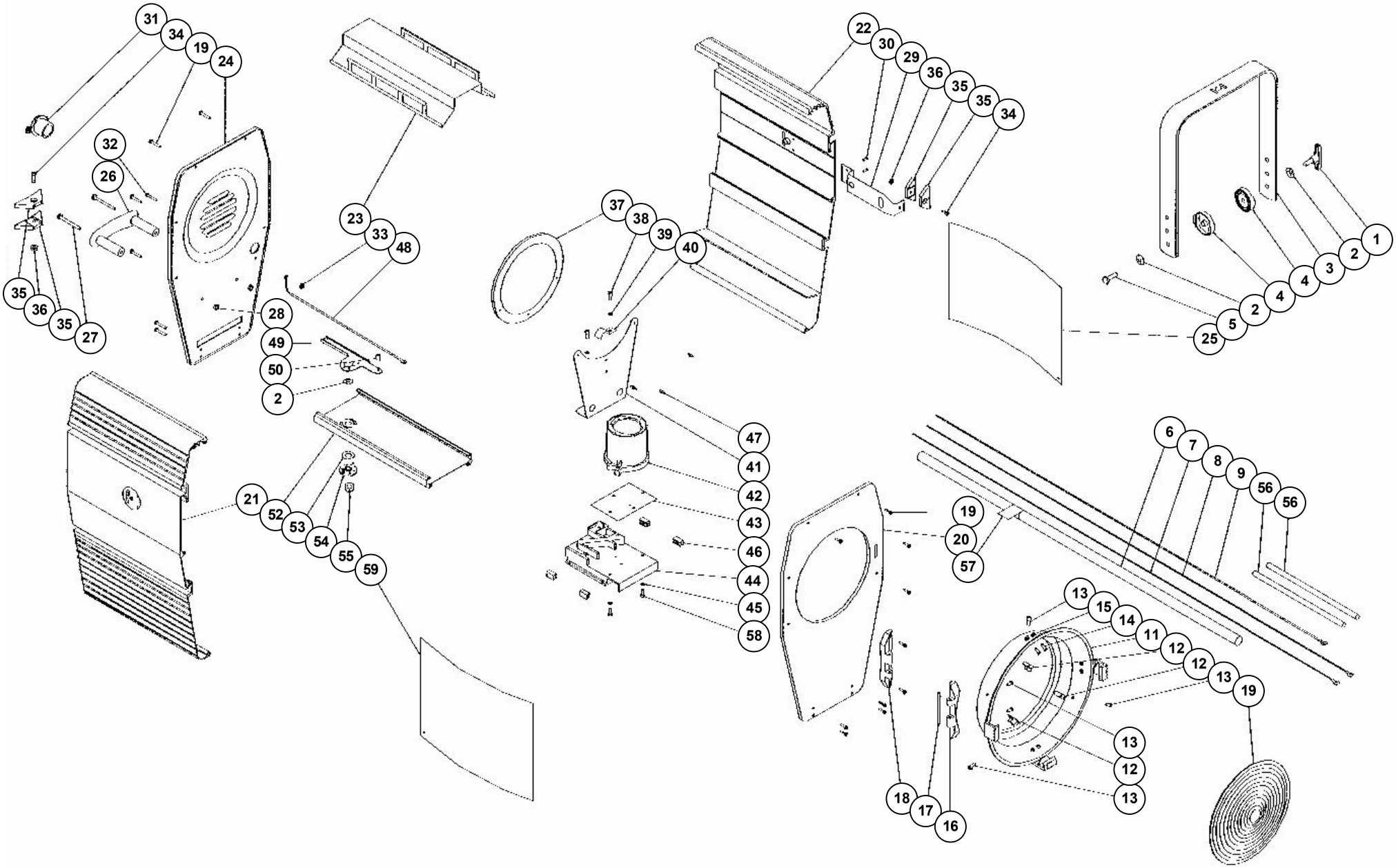

Strand Lighting Ltd

Fresnel 6 inch Theatre

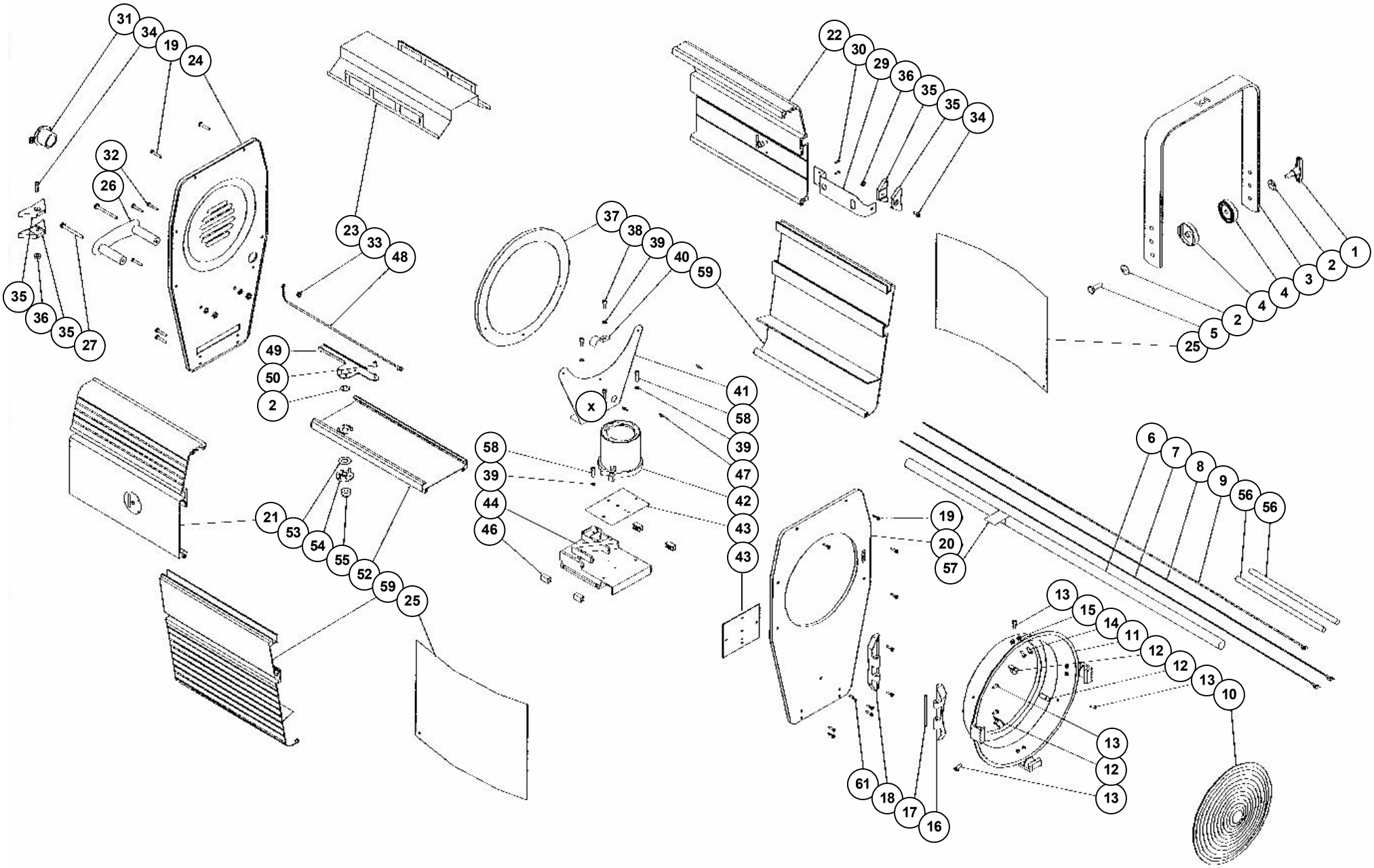

Strand Lighting Ltd

Fresnel 8 inch Theatre